20.Cylinder Block

A: REMOVAL

NOTE:
Before conducting this procedure, drain the engine oil completely.

1) Remove the intake manifold. <Ref. to FU(H4DOTC)-17, REMOVAL, Intake Manifold.>
2) Remove the V-belts. <Ref. to ME(H4DOTC)-44, REMOVAL, V-belt.>
3) Remove the crank pulley. <Ref. to ME(H4DOTC)-46, REMOVAL, Crank Pulley.>
4) Remove the timing belt cover. <Ref. to ME(H4DOTC)-47, REMOVAL, Timing Belt Cover.>
5) Remove the timing belt. <Ref. to ME(H4DOTC)-48, REMOVAL, Timing Belt.>
6) Remove the cam sprocket. <Ref. to ME(H4DOTC)-56, REMOVAL, Cam Sprocket.>
7) Remove the crank sprocket. <Ref. to ME(H4DOTC)-57, REMOVAL, Crank Sprocket.>
8) Remove the generator and A/C compressor with their brackets.
9) Remove the cylinder head. <Ref. to ME(H4DOTC)-64, REMOVAL, Cylinder Head.>
10) Remove the clutch disc and cover. (MT model) <Ref. to CL-14, REMOVAL, Clutch Disc and Cover.>
11) Remove the flywheel. (MT model) <Ref. to CL-17, REMOVAL, Flywheel.>

ST 498497100 CRANKSHAFT STOPPER

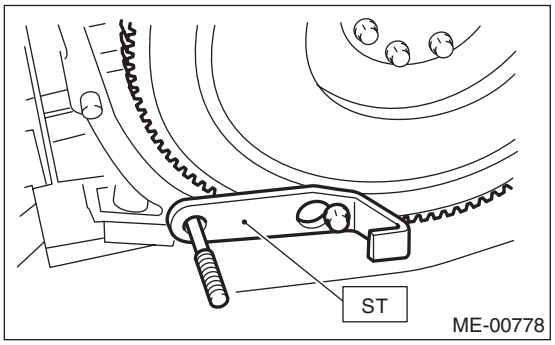

12) Remove the drive plate. (AT model)
Using the ST, lock the crankshaft.

ST 498497100 CRANKSHAFT STOPPER

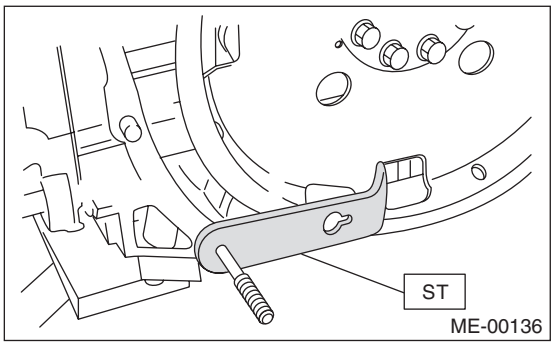

13) Remove the oil separator cover.
14) Remove the water by-pass pipe for heater.
15) Remove the oil filter. <Ref. to LU(H4DOTC)-28, REMOVAL, Engine Oil Filter.>
16) Remove the oil cooler. <Ref. to LU(H4DOTC)-25, REMOVAL, Engine Oil Cooler.>
17) Remove the water pump. <Ref. to CO(H4DOTC)-21, REMOVAL, Water Pump.>
18) Remove the bolts which install oil pump onto cylinder block.

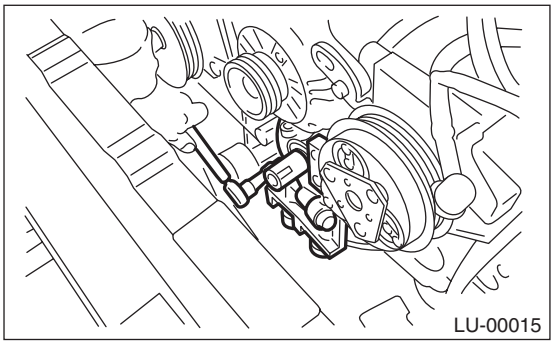

19) Remove the oil pump from cylinder block.

NOTE:
- When disassembling and checking the oil pump, loosen the relief valve plug before removing the oil pump.
- Remove the oil pump from cylinder block using a flat tip screwdriver.

CAUTION:
Be careful not to scratch the mating surface of cylinder block and oil pump.

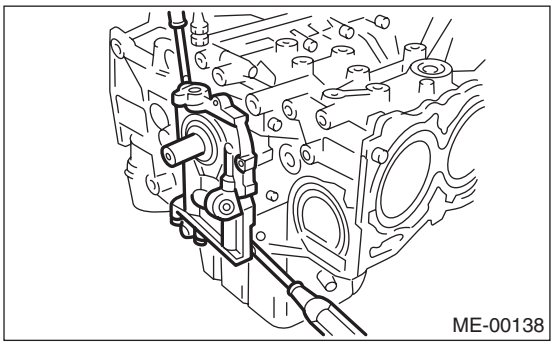

20) Remove the oil pan.
    (1) Set the part so that the cylinder block (LH) is on the upper side.
    (2) Remove the bolts which secure oil pan to cylinder block.
    (3) Insert an oil pan cutter blade between cylinder block-to-oil pan clearance and remove the oil pan.

CAUTION:
Do not use a screwdriver or similar tools in place of oil pan cutter.

21) Remove the oil strainer stay.
22) Remove the oil strainer.
23) Remove the baffle plate.

24) Remove the water pipe.

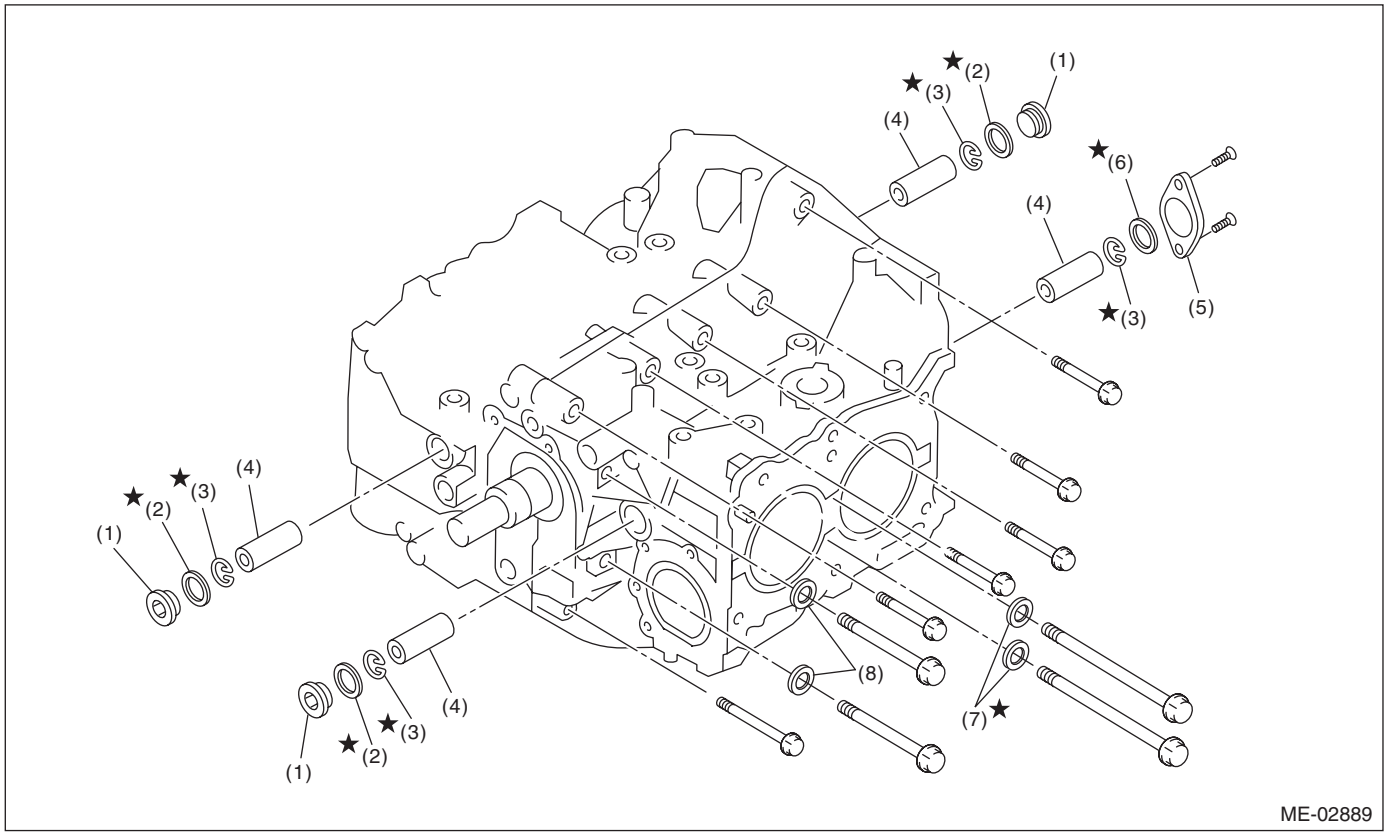

(1)	Service hole plug	(4)	Piston pin	(7)	Seal washer
(2)	Gasket	(5)	Service hole cover	(8)	Washer
(3)	Snap ring	(6)	O-ring		

25) Remove the service hole plugs using a hexagon wrench [14 mm].

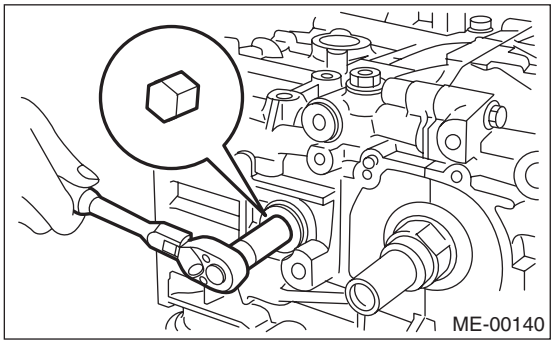

26) Remove the service hole cover.

27) Rotate the crankshaft to bring #1 and #2 pistons to bottom dead center position, then remove the piston snap ring through service hole of #1 and #2 cylinders.

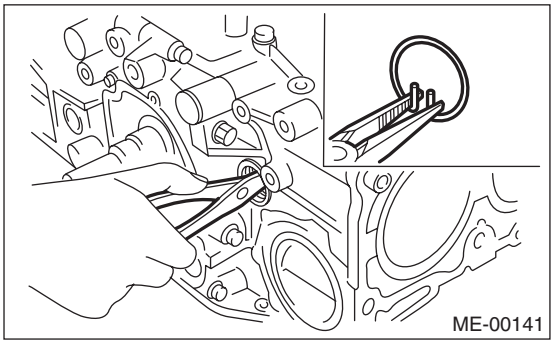

28) Draw out the piston pin from #1 and #2 pistons using ST.

NOTE:
Be careful not to confuse the original combination of piston, piston pin and cylinder.

ST 499097700 PISTON PIN REMOVER

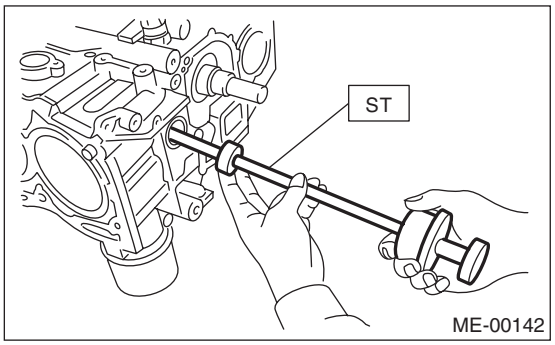

29) Similarly remove the piston pins from #3 and #4 pistons.
30) Remove the cylinder block connecting bolt on the RH side.
31) Loosen the cylinder block connecting bolt on the LH side by 2-3 turns.
32) Set the part so that the cylinder block (LH) is on the upper side, and remove the cylinder block connecting bolt.
33) Separate the cylinder block (LH) and (RH).

NOTE:
When separating the cylinder block, do not allow the connecting rod to fall and damage the cylinder block.

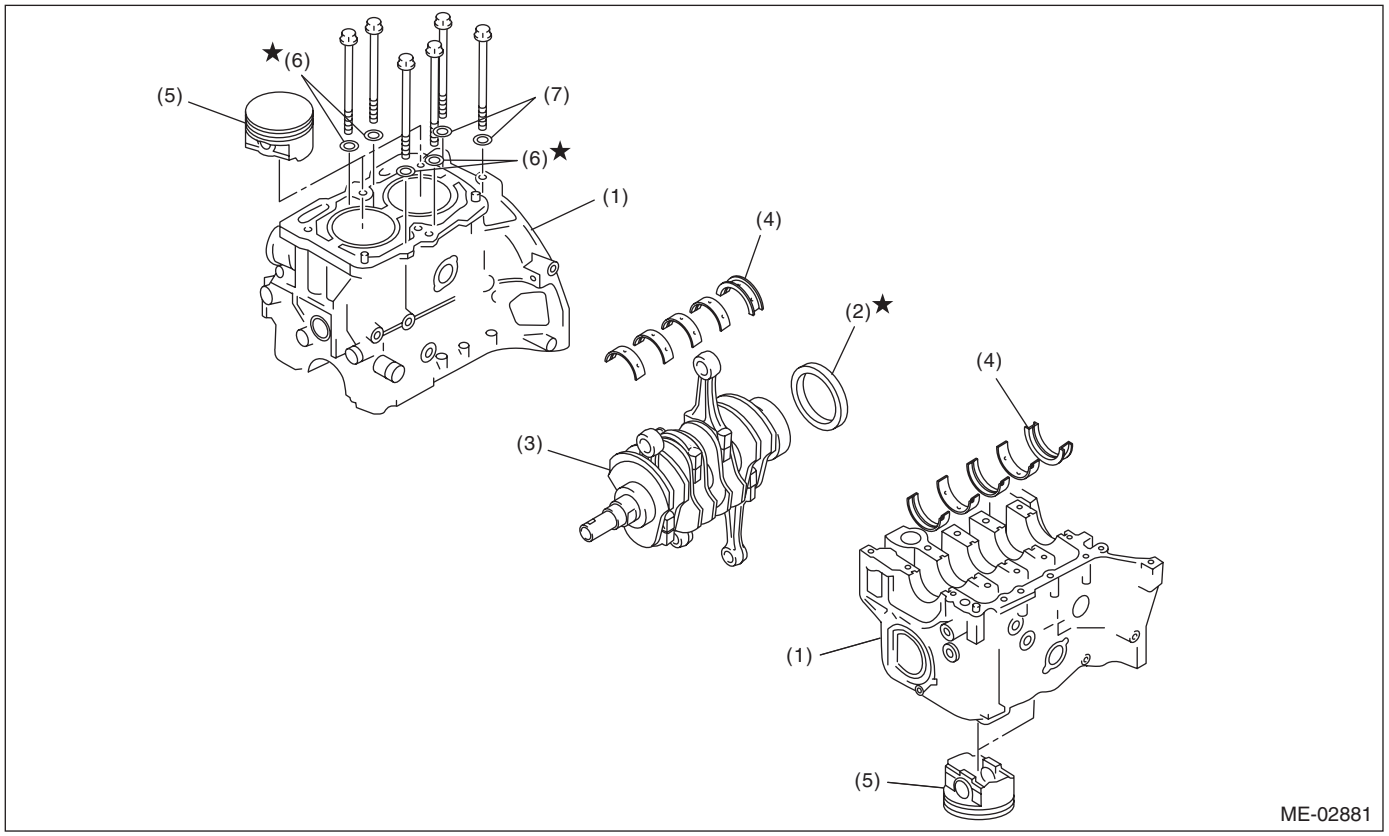

(1)	Cylinder block	(4)	Crankshaft bearing	(6)	Seal washer
(2)	Rear oil seal	(5)	Piston	(7)	Washer
(3)	Crankshaft				

34) Remove the rear oil seal.
35) Remove the crankshaft together with connecting rod.
36) Remove the crankshaft bearings from cylinder block using a hammer handle.

NOTE:
Be careful not to confuse the crankshaft bearing combination. Press the bearing at the end opposite to locking lip.

37) Draw out each piston from cylinder block using wooden bar or hammer handle.

NOTE:
Be careful not to confuse the original combination of piston and cylinder.

B: INSTALLATION

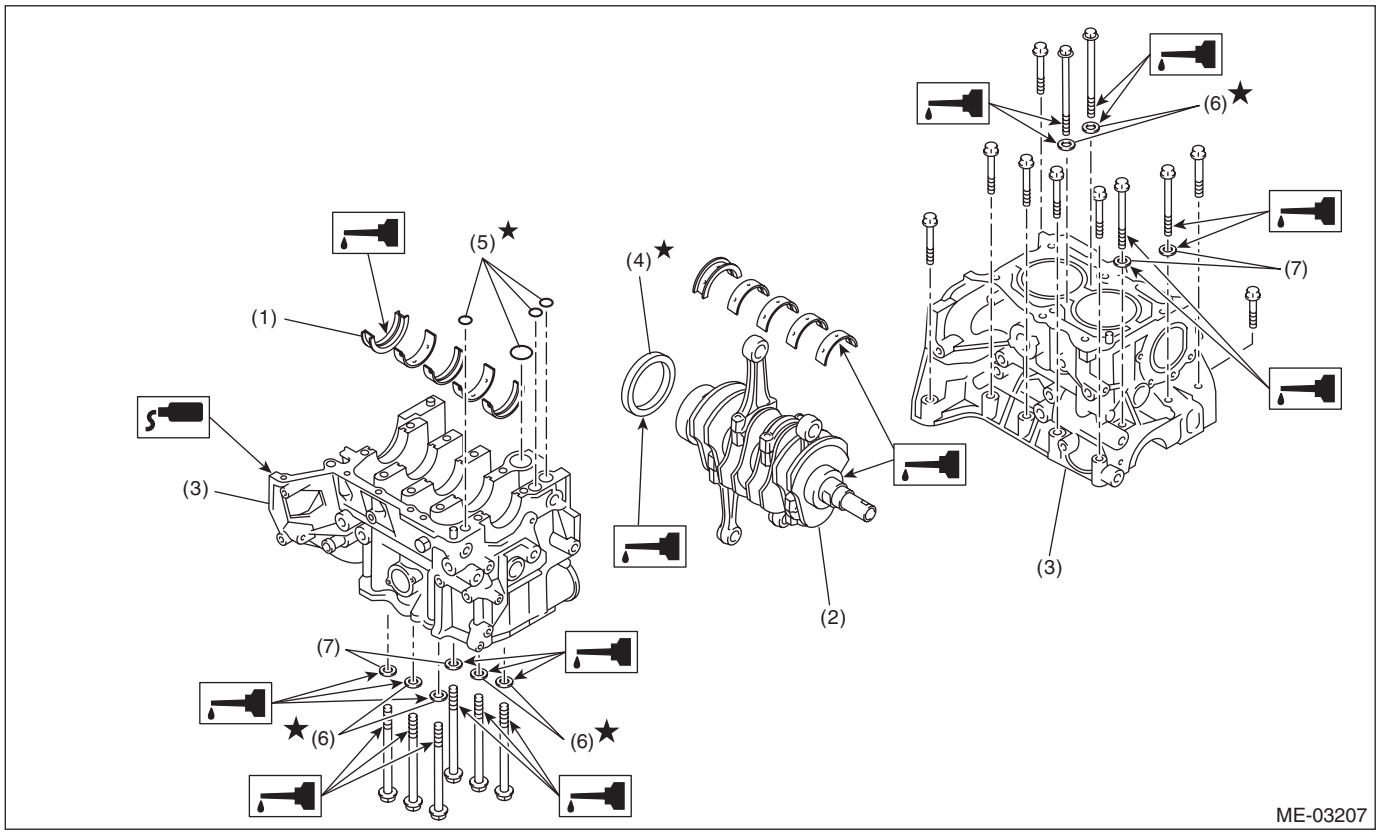

(1)	Crankshaft bearing	(4)	Rear oil seal	(6)	Seal washer
(2)	Crankshaft	(5)	O-ring	(7)	Washer
(3)	Cylinder block				

1) Remove oil on the mating surface of cylinder block before installation. Apply a coat of engine oil to the bearing and crankshaft journal.
2) Position the crankshaft and O-ring on the cylinder block (RH).
3) Apply liquid gasket to the mating surfaces of cylinder block (RH), and position the cylinder block (LH).

Liquid gasket:
THREE BOND 1215 (Part No. 004403007) or equivalent

NOTE:
Do not allow liquid gasket to run over into O-ring grooves, oil passages, bearing grooves, etc.

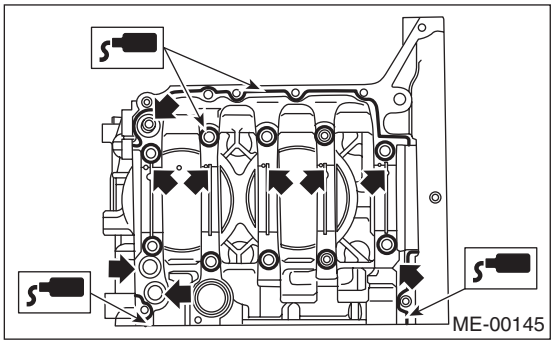

4) Apply a coat of engine oil to the washer and bolt thread.

NOTE:
Use a new seal washer.
5) Tighten the 10 mm cylinder block connecting bolts on LH side (A — D) in alphabetical sequence.

Tightening torque:
10 N·m (1.0 kgf-m, 7.4 ft-lb)

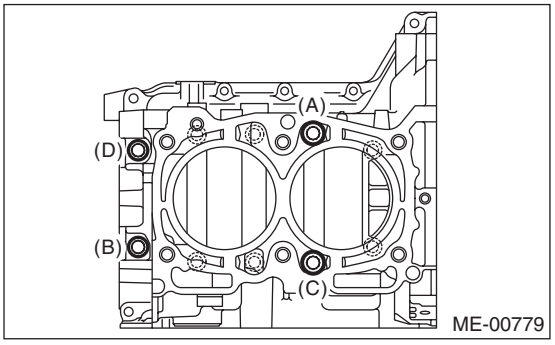

6) Tighten the 10 mm cylinder block connecting bolts on RH side (E — J) in alphabetical sequence.

Tightening torque:
10 N·m (1.0 kgf-m, 7.4 ft-lb)

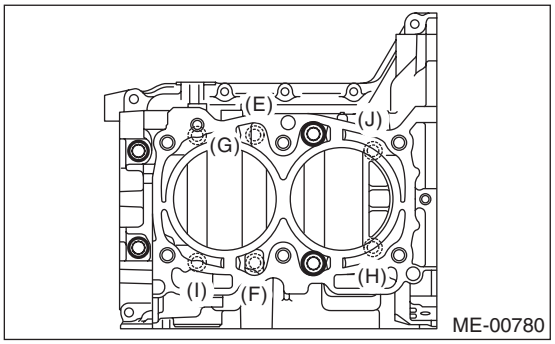

7) Tighten the cylinder block connecting bolts on LH side (A — D) further in alphabetical sequence.

Tightening torque:
18 N·m (1.8 kgf-m, 13.3 ft-lb)

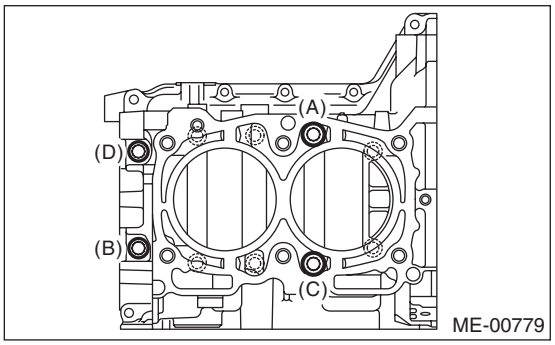

8) Tighten the cylinder block connecting bolts on RH side (E — J) further in alphabetical sequence.

Tightening torque:
18 N·m (1.8 kgf-m, 13.3 ft-lb)

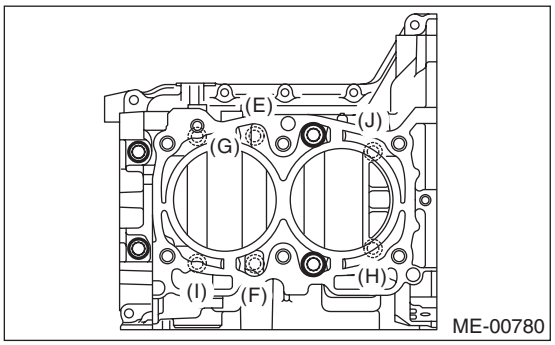

9) Tighten the cylinder block connecting bolts on LH side (A — D) further in alphabetical sequence.

- (A), (C): Angle tightening

Tightening angle:
90°

- (B), (D): Torque tightening

Tightening torque:
40 N·m (4.1 kgf-m, 29.6 ft-lb)

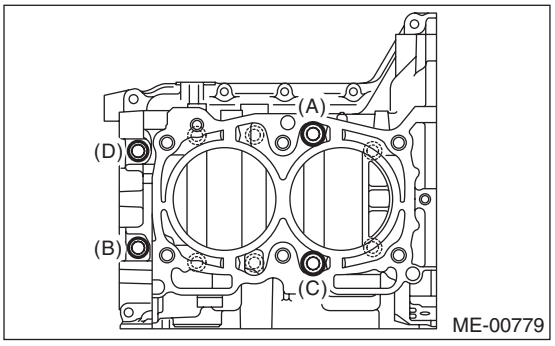

10) Tighten the cylinder block connecting bolts on RH side (E — J) further in alphabetical sequence.

Tightening angle:
90°

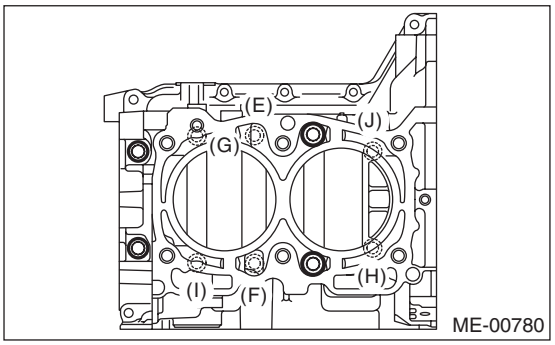

11) Tighten the 8 mm and 6 mm cylinder block connecting bolts on the LH side (A — H) in alphabetical order.

Tightening torque:
(A) — (G): 25 N·m (2.5 kgf-m, 18.4 ft-lb)
(H): 6.4 N·m (0.65 kgf-m, 4.7 ft-lb)

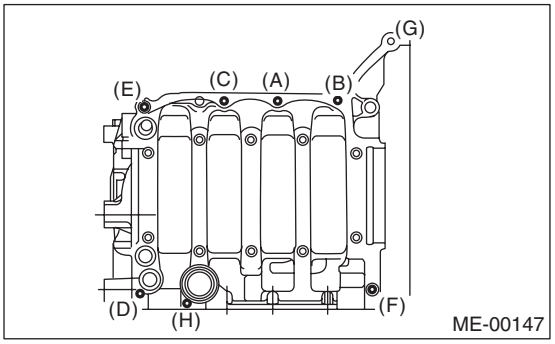

12) Apply a coat of engine oil to the oil seal periphery, then install the rear oil seal using ST1 and ST2.

NOTE:
Use a new oil seal.

ST1	499597100	CRANKSHAFT OIL SEAL GUIDE
ST2	499587200	CRANKSHAFT OIL SEAL INSTALLER

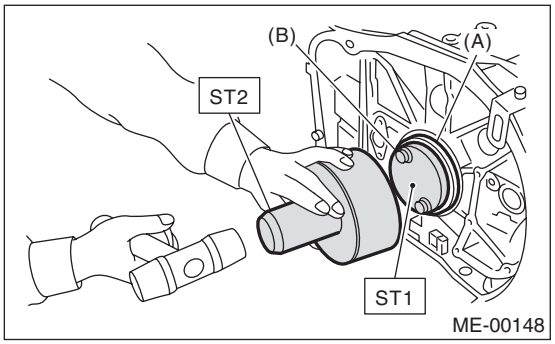

(A) Rear oil seal
(B) Flywheel attaching bolt

13) Position the top ring gap at (A) or (B) in the figure.

NOTE:
Assemble so that the piston ring mark “R” faces the top side of the piston.

14) Position the second ring gap at 180° on the reverse side the top ring gap.

NOTE:
Assemble so that the piston ring mark “R” faces the top side of the piston.

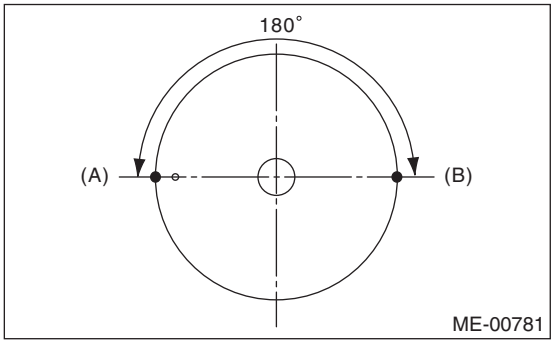

15) Position the upper rail gap at (C) in the figure.

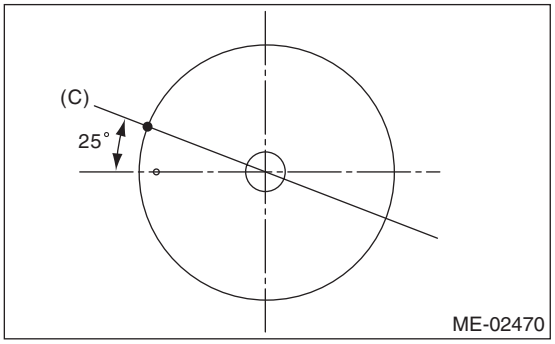

16) Align the upper rail spin stopper (E) to the side hole (D) on the piston.

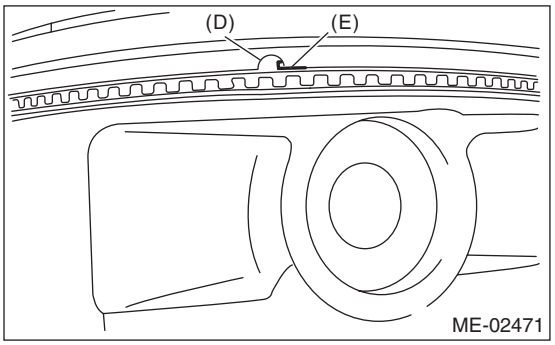

17) Position the expander gap at (F) in the figure.

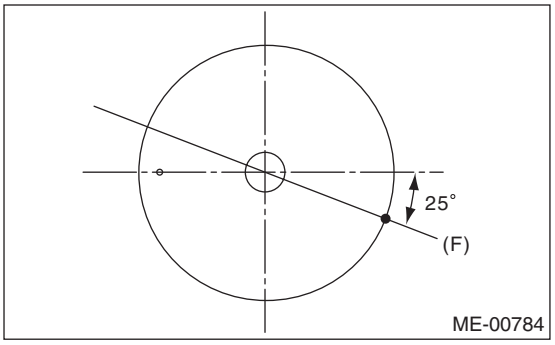

18) Position the lower rail gap at (G) in the figure.

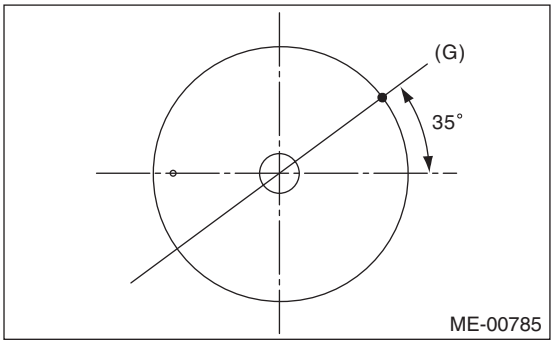

NOTE:
- Make sure ring gaps do not face the same direction.
- Make sure ring gaps are not within the piston skirt area.

19) Install the snap ring.
Install the snap rings in the piston holes located opposite to the service holes in cylinder block before positioning pistons in cylinders.

NOTE:
Use new snap rings.

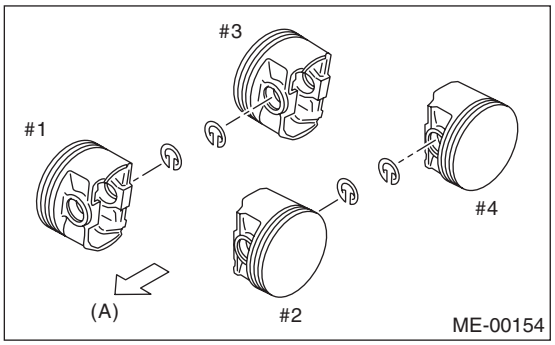

(A) Front

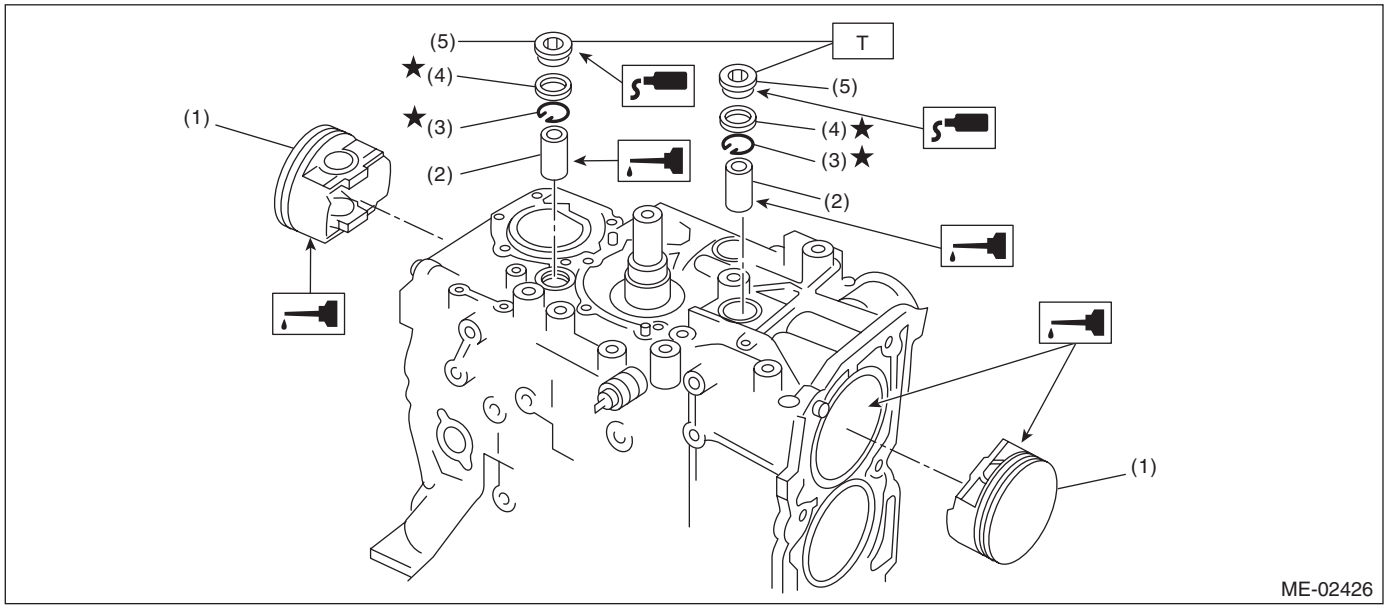

(1) Piston
(2) Piston pin
(3) Snap ring
(4) Gasket
(5) Service hole plug

Tightening torque:N·m (kgf-m, ft-lb)
T: 70 (7.1, 51.6)

20) Install piston.
(1) Set the parts so that the #1 and #2 cylinders are on the upper side.
(2) Using the ST1, turn the crankshaft so that #1 and #2 connecting rods are set at bottom dead center.

ST1 499987500 CRANKSHAFT SOCKET

(3) Apply a coat of engine oil to the pistons and cylinders and insert pistons in their cylinders using ST2.

ST2 498747300 PISTON GUIDE

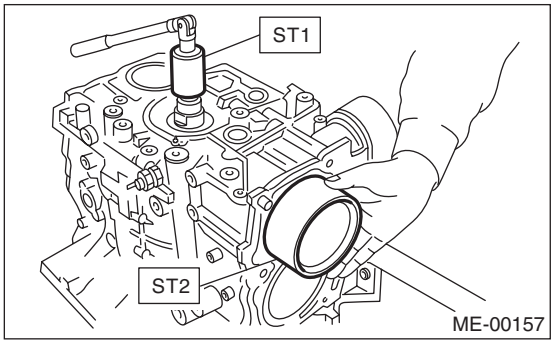

NOTE:
Face the piston front mark towards the front of the engine.

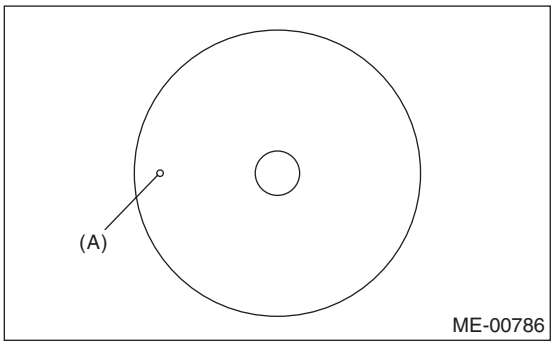

(A) Front mark

21) Install piston pin.
(1) Apply a coat of engine oil to ST3.
(2) Insert ST3 into the service hole to align the piston pin hole and the connecting rod small end.

ST3 499017100 PISTON PIN GUIDE

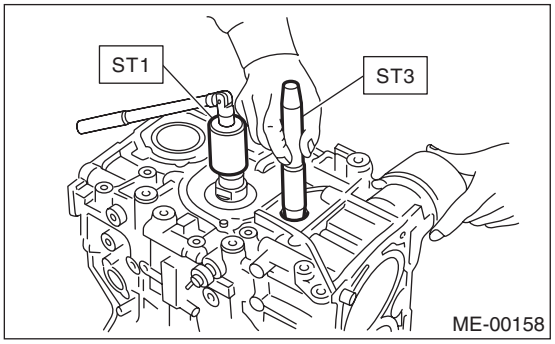

(3) Apply a coat of engine oil to piston pin, and insert the piston pin into piston and connecting rod through service hole.
(4) Install the snap ring.

NOTE:
Use new snap rings.

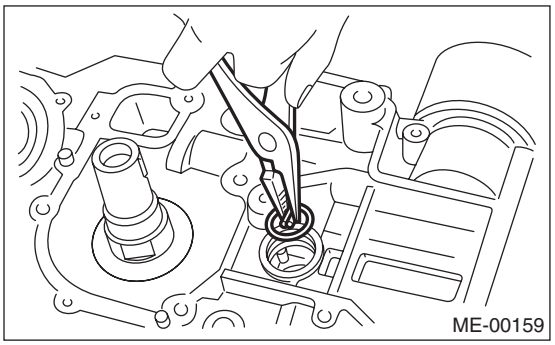

(5) Apply liquid gasket to the threaded portion of the service hole plug.

Liquid gasket:
THREE BOND 1105 (Part No. 004403010) or equivalent

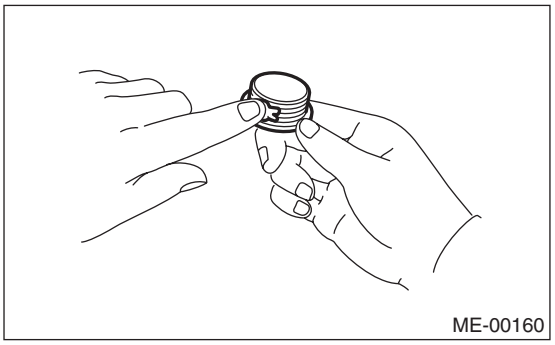

(6) Install the service hole plug and gasket.

NOTE:
Use a new gasket.

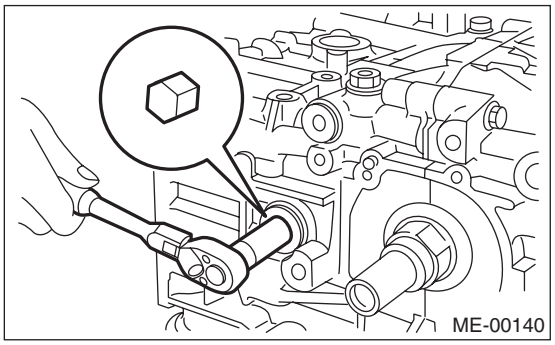

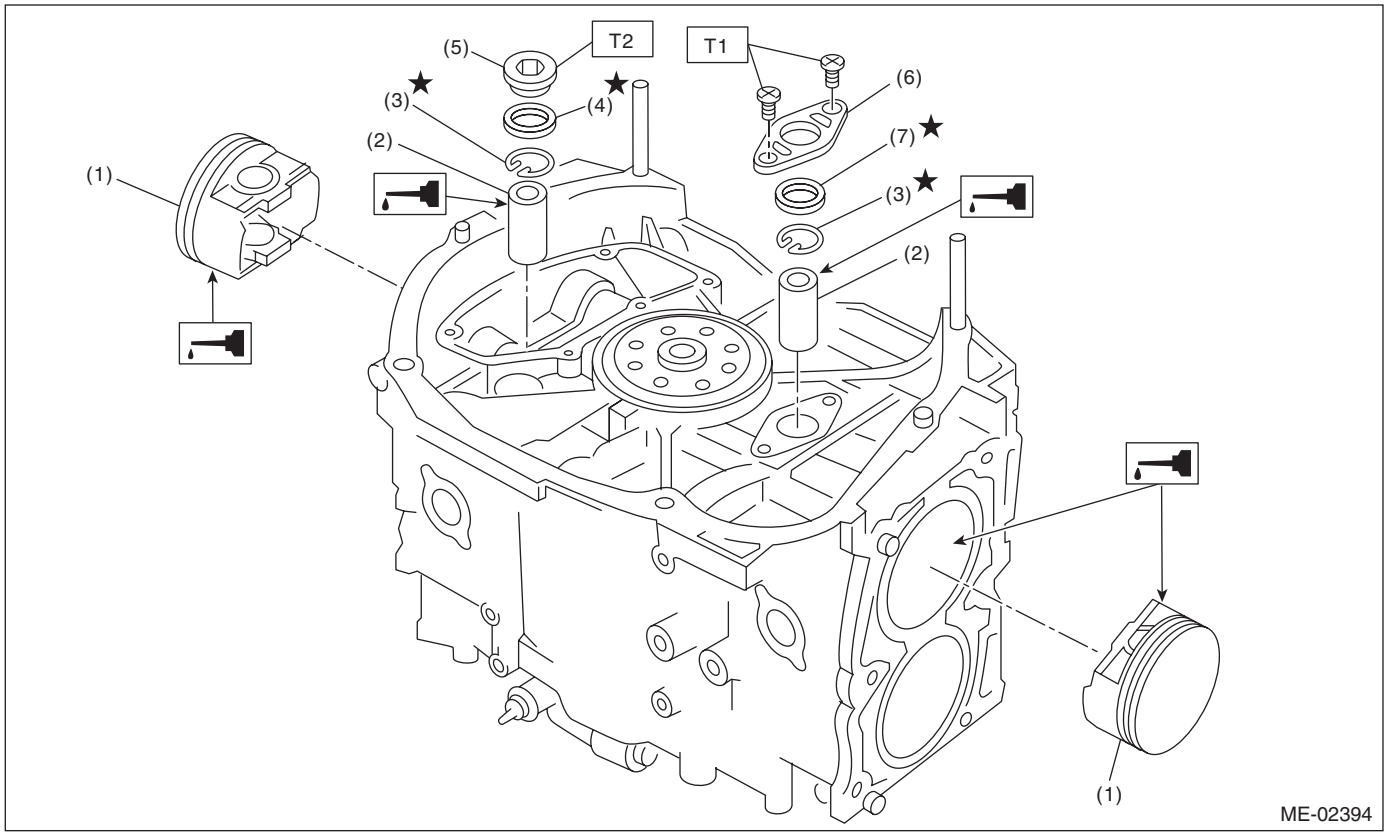

(1)	Piston	(5)	Service hole plug	***Tightening torque:N·m (kgf-m, ft-lb)***
(2)	Piston pin	(6)	Service hole cover	***T1: 6.4 (0.65, 4.7)***
(3)	Snap ring	(7)	O-ring	***T2: 70 (7.1, 51.6)***
(4)	Gasket			

(7) Set the parts so that the #3 and #4 cylinders are on the upper side. Following the same procedures as used for #1 and #2 cylinders, install the pistons and piston pins.

22) Install the water pipe.

23) Install the baffle plate.

Tightening torque:
6.4 N·m (0.65 kgf-m, 4.7 ft-lb)

24) Install the oil strainer to the cylinder block.

NOTE:
Use new O-rings.

Tightening torque:
10 N·m (1.0 kgf-m, 7.4 ft-lb)

25) Install the oil strainer stay.

NOTE:
Tighten the oil strainer along with the baffle plate.

Tightening torque:
6.4 N·m (0.65 kgf-m, 4.7 ft-lb)

26) Apply liquid gasket to the mating surfaces, and install the oil pan.

NOTE:
Install within 5 min. after applying liquid gasket.

Liquid gasket:
THREE BOND 1207C (Part No. 004403012) or equivalent

Tightening torque:
5 N·m (0.5 kgf-m, 3.6 ft-lb)

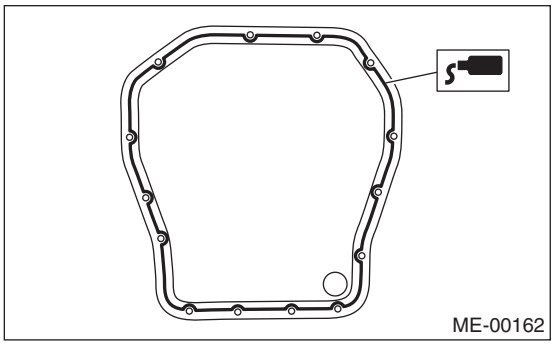

27) Apply liquid gasket to the mating surfaces and the threaded portion of bolt (A) shown in the figure (when reusing the bolt), and then install the oil separator cover.

Liquid gasket:
Mating surface
THREE BOND 1217G (Part No. K0877Y0100) or equivalent
Bolt thread (A)
THREE BOND 1324 (Part No. 004403042) or equivalent

Tightening torque:
6.4 N·m (0.65 kgf-m, 4.7 ft-lb)

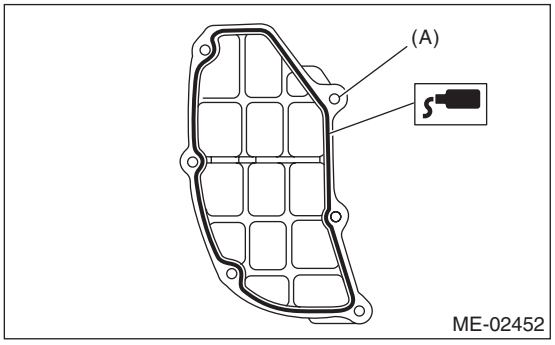

28) Install the flywheel. <Ref. to CL-17, INSTALLATION, Flywheel.>

29) Install the clutch disc and cover. <Ref. to CL-14, INSTALLATION, Clutch Disc and Cover.>

30) Install the drive plate. (AT model)
To lock the crankshaft, use ST.
ST 498497100 CRANKSHAFT STOPPER

Tightening torque:
Except for STI model
72 N·m (7.3 kgf-m, 52.8 ft-lb)
STI model
75 N·m (7.6 kgf-m, 55.3 ft-lb)

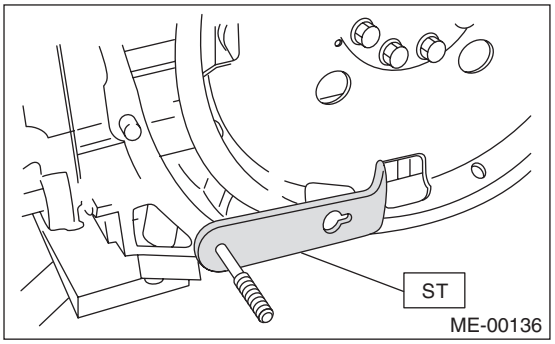

31) Install the oil pump.
(1) Using the ST, install the front oil seal.

NOTE:
Use a new front oil seal.
ST 499587100 OIL SEAL INSTALLER

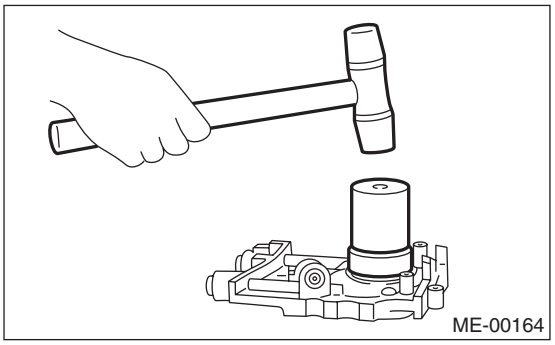

(2) Apply liquid gasket to the matching surface of oil pump.

Liquid gasket:
THREE BOND 1215 (Part No. 004403007) or equivalent

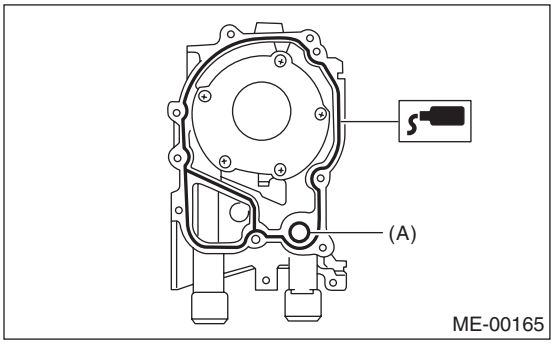

(A) O-ring

(3) Apply a coat of engine oil to the inside of oil seal.

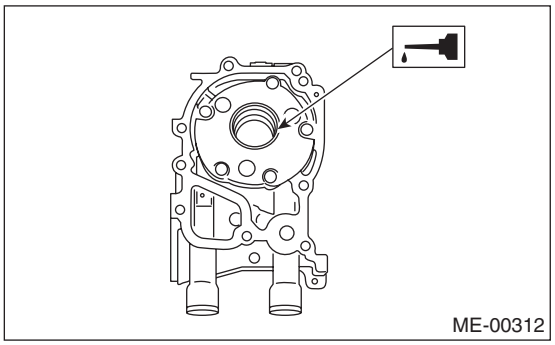

(4) Install the oil pump to cylinder block. Be careful not to damage the oil seal during installation.

NOTE:
- Make sure the oil seal lip is not folded.
- Align the flat surface of oil pump's inner rotor with crankshaft before installation.
- Use a new O-ring and oil seal.
- When disassembly and check of the oil pump was performed, tighten the relief valve plug after attaching the oil pump.

Tightening torque:
44 N·m (4.5 kgf-m, 32.5 ft-lb)

(5) Apply liquid gasket to the three bolts thread shown in figure. (When reusing the bolts)

Liquid gasket:
THREE BOND 1324 (Part No. 004403042) or equivalent

Tightening torque:
6.4 N·m (0.65 kgf-m, 4.7 ft-lb)

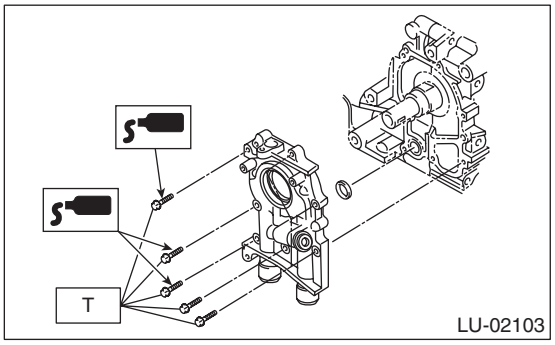

32) Install the water pump and gasket.

Tightening torque:
First: 12 N·m (1.2 kgf-m, 8.7 ft-lb)
Second: 12 N·m (1.2 kgf-m, 8.7 ft-lb)

NOTE:
- When installing the water pump, tighten bolts in two stages in alphabetical sequence as shown in the figure.
- Use a new gasket.

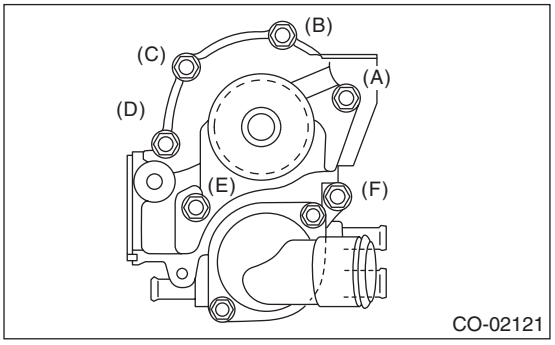

33) Install the water by-pass pipe for heater.
34) Install the oil cooler. <Ref. to LU(H4DOTC)-26, INSTALLATION, Engine Oil Cooler.>
35) Install the oil filter. <Ref. to LU(H4DOTC)-28, INSTALLATION, Engine Oil Filter.>
36) Install the water by-pass pipe between oil cooler and water pump.
37) Install the water pipe.

NOTE:
Use new O-rings.

38) Install the cylinder head. <Ref. to ME(H4DOTC)-64, INSTALLATION, Cylinder Head.>
39) Install the oil level gauge guide and tighten the attaching bolt (left side).

Tightening torque:
6.4 N·m (0.65 kgf-m, 4.7 ft-lb)

40) Install the rocker cover and rocker cover gasket.

NOTE:
Use a new rocker cover gasket.

41) Install the crank sprocket. <Ref. to ME(H4DOTC)-57, INSTALLATION, Crank Sprocket.>
42) Install the cam sprocket. <Ref. to ME(H4DOTC)-56, INSTALLATION, Cam Sprocket.>
43) Install the timing belt. <Ref. to ME(H4DOTC)-50, INSTALLATION, Timing Belt.>
44) Install the timing belt cover. <Ref. to ME(H4DOTC)-47, INSTALLATION, Timing Belt Cover.>
45) Install the crank pulley. <Ref. to ME(H4DOTC)-46, INSTALLATION, Crank Pulley.>
46) Install the generator and A/C compressor brackets on cylinder head.
47) Install the V-belts. <Ref. to ME(H4DOTC)-44, INSTALLATION, V-belt.>
48) Install the intake manifold. <Ref. to FU(H4DOTC)-17, REMOVAL, Intake Manifold.>

C: DISASSEMBLY

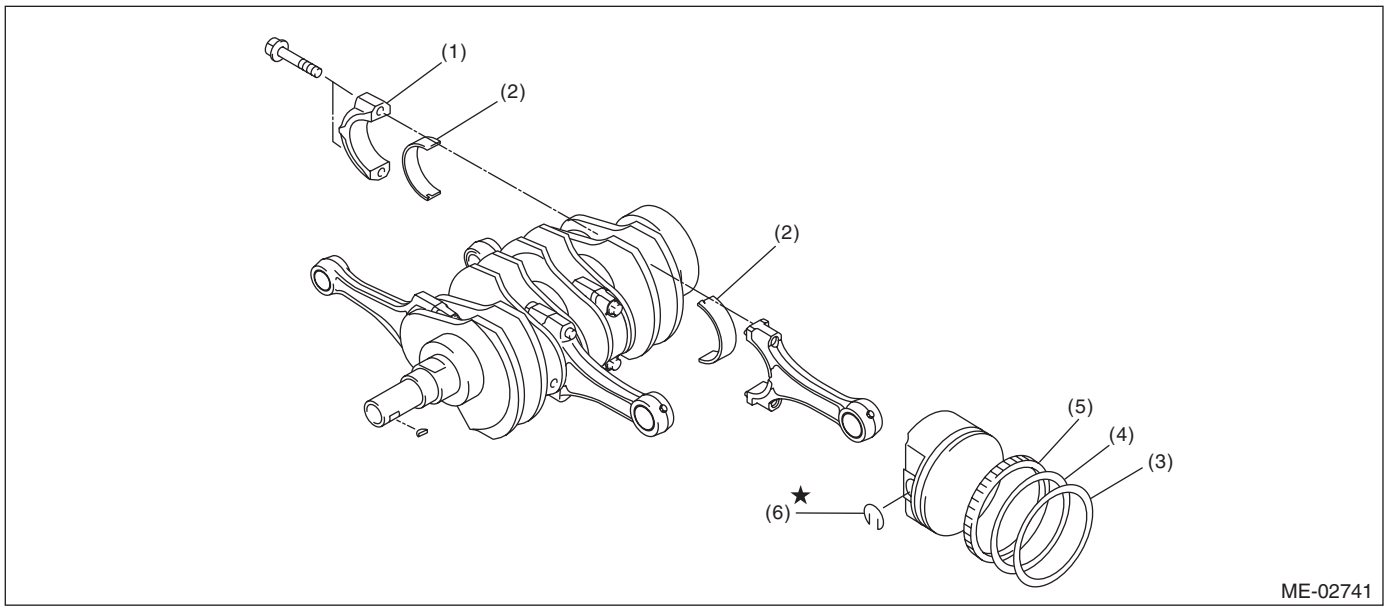

(1)	Connecting rod cap	(3)	Top ring	(5)	Oil ring
(2)	Connecting rod bearing	(4)	Second ring	(6)	Snap ring

1) Remove the connecting rod cap.
2) Remove the connecting rod bearing.

NOTE:
Arrange the removed connecting rod, connecting rod cap and bearing in order, to prevent confusion.

3) Remove the piston rings using piston ring expander.
4) Remove the oil ring by hand.

NOTE:
Arrange the removed piston rings in proper order, to prevent confusion.

5) Remove the snap ring.

D: ASSEMBLY

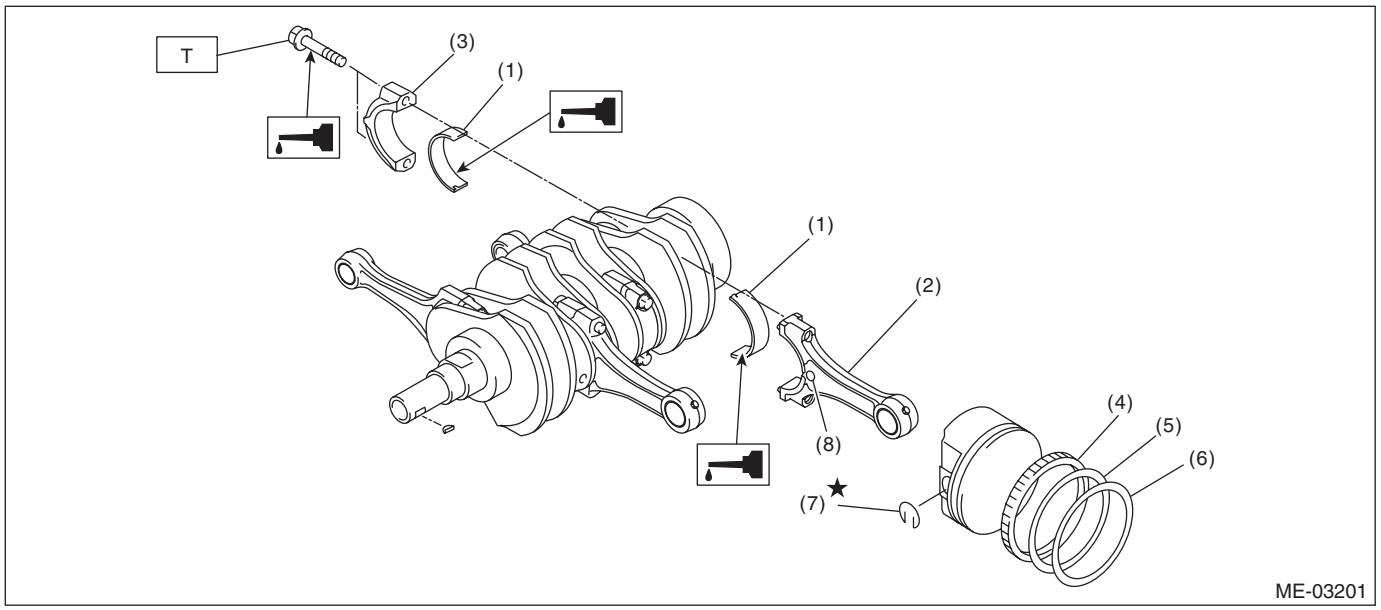

(1)	Connecting rod bearing	(5)	Second ring
(2)	Connecting rod	(6)	Top ring
(3)	Connecting rod cap	(7)	Snap ring
(4)	Oil ring	(8)	Side mark

Tightening torque:N·m (kgf-m, ft-lb)
T: 52 (5.3, 38.4)

1) Apply oil to the surface of the connecting rod bearings, and install the connecting rod bearings on connecting rods and connecting rod caps.
2) Position each connecting rod with the marking side facing forward.
3) Tighten the connecting rod cap with connecting rod bolt.
Make sure the arrow on connecting rod cap faces the front during installation.

NOTE:
- Each connecting rod has its own mating cap. Make sure that they are assembled correctly by checking their matching number.
- When tightening the connecting rod bolts, apply oil on the threads.

Tightening torque:
52 N·m (5.3 kgf-m, 38.4 ft-lb)

4) Install the oil ring upper rail, expander and lower rail by hand.
5) Install the second ring and top ring using piston ring expander.

E: INSPECTION

1. CYLINDER BLOCK

1) Check for cracks and damage. Use liquid penetrant tester on the important sections to check for fissures. Check that there are no marks of gas leaking or water leaking on gasket installing surface.
2) Check the oil passages for clogging.
3) Inspect the cylinder block surface that mates with cylinder head for warping by using a straight edge, and correct by grinding if necessary.

Warping limit:
0.025 mm (0.00098 in)

Grinding limit:
0.1 mm (0.004 in)

Standard height of cylinder block:
201.0 mm (7.91 in)

2. CYLINDER AND PISTON

1) The cylinder bore size is stamped on the front upper face of the cylinder block.

NOTE:
- Measurement should be performed at a temperature of 20°C (68°F).
- Standard sized pistons are classified into two grades, “A” and “B”. These grades should be used as guide lines in selecting a standard piston.

Standard diameter:
A: 99.505 — 99.515 mm (3.9175 — 3.9179 in)
B: 99.495 — 99.505 mm (3.9171 — 3.9175 in)

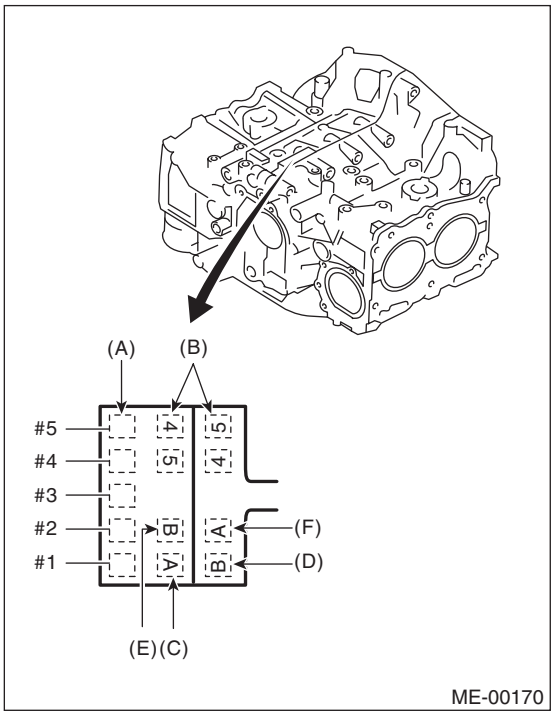

(A) Main journal size mark
(B) Cylinder block (RH) – (LH) combination mark
(C) #1 cylinder bore size mark
(D) #2 cylinder bore size mark
(E) #3 cylinder bore size mark
(F) #4 cylinder bore size mark

2) Cylinder inner diameter measurement
Measure the inner diameter of each cylinder in both the thrust and piston pin directions at the heights as shown in the figure, using a cylinder bore gauge.

NOTE:
Measurement should be performed at a temperature of 20°C (68°F).

Taper:
Standard
0.015 mm (0.0006 in)
Limit
0.050 mm (0.0020 in)

Out-of-roundness:
Standard
0.010 mm (0.0004 in)
Limit
0.050 mm (0.0020 in)

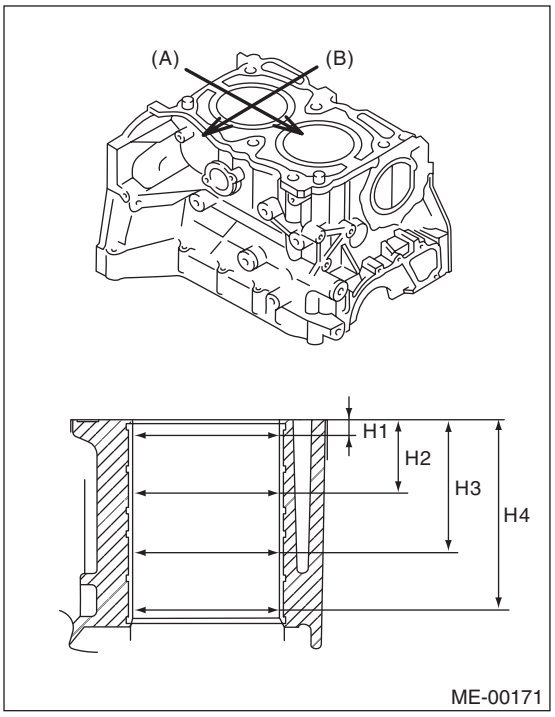

(A) Piston pin direction
(B) Thrust direction
H1: 10 mm (0.39 in)
H2: 45 mm (1.77 in)
H3: 80 mm (3.15 in)
H4: 115 mm (4.53 in)

3) When the piston is to be replaced due to general or cylinder wear, determine a suitable sized piston by measuring the piston clearance.

4) Piston outer diameter measurement
Measure the outer diameter of each piston at the height as shown in the figure. (Thrust direction)

NOTE:
Measurement should be performed at a temperature of 20°C (68°F).

Piston grade point H:
38.2 mm (1.50 in)

Piston outer diameter:
Standard
A: 99.505 — 99.515 mm (3.9175 — 3.9179 in)
B: 99.495 — 99.505 mm (3.9171 — 3.9175 in)
0.25 mm (0.0098 in) oversize
99.745 — 99.765 mm (3.9270 — 3.9278 in)
0.50 mm (0.0197 in) oversize
99.995 — 100.015 mm (3.9368 — 3.9376 in)

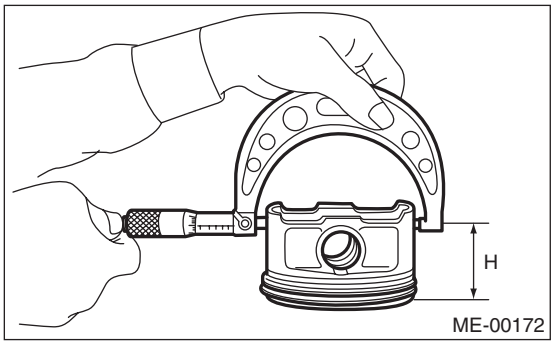

5) Calculate the clearance between cylinder and piston.

NOTE:
Measurement should be performed at a temperature of 20°C (68°F).

Cylinder to piston clearance at 20°C (68°F):
Standard
–0.010 — 0.010 mm (–0.0004 — 0.0004 in)
Limit
0.030 mm (0.0012 in)

6) Boring and honing
(1) If any of the value of taper, out-of-roundness, or cylinder-to-piston clearance exceeds the specified limit or if there is any damage on the cylinder wall, rebore it for replacement with an oversize piston.

CAUTION:
• When any of the cylinders needs reboring, other cylinders must be bored at the same time, and replaced with oversize pistons.
• Do not perform boring on one cylinder only. Do not replace only a single cylinder for an oversize piston.

(2) If the cylinder inner diameter exceeds the limit after boring and honing, replace the cylinder block.

NOTE:
Immediately after reboring, the cylinder diameter may differ from its real diameter due to temperature rise. Thus, when measuring the cylinder diameter, wait until it has cooled to room temperature.

Cylinder inner diameter boring limit (diameter):
To 100.005 mm (3.937 in)

3. PISTON AND PISTON PIN

1) Check the piston and piston pin for breaks, cracks or wear. Replace if faulty.
2) Check the piston ring groove for wear or damage. Replace if faulty.
3) Make sure that the piston pin can be inserted into the piston pin hole with a thumb at 20°C (68°F). Replace if faulty.

Standard clearance between piston pin and hole in piston:
Standard
0.004 — 0.008 mm (0.0002 — 0.0003 in)
Limit
0.020 mm (0.0008 in)

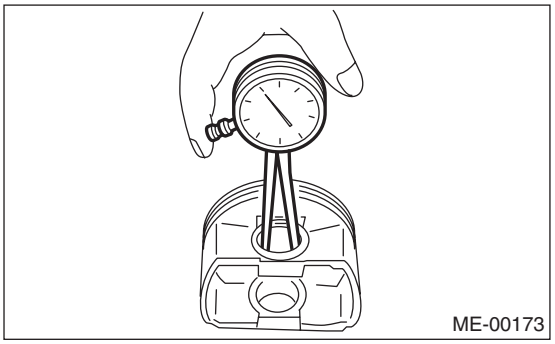

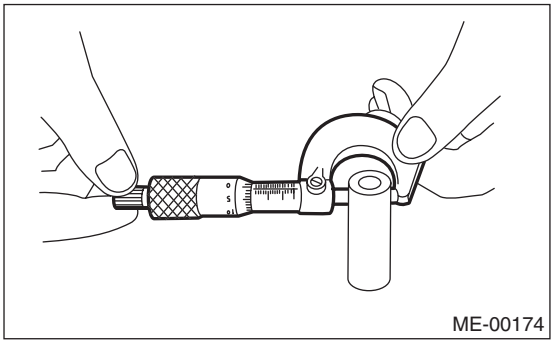

4) Check the snap ring installation groove (A) on the piston for burr. If necessary, remove burr from the groove so that the piston pin can lightly move.

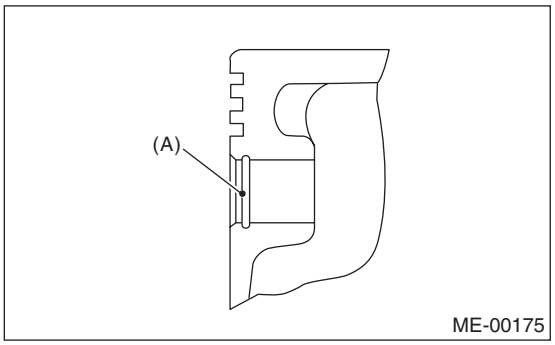

5) Check the piston pin snap ring for distortion, cracks and wear.

4. PISTON RING

1) If the piston ring is broken, damaged or worn, or if its tension is insufficient, or when the piston is replaced, replace the piston ring with a new part of the same size as the piston.

NOTE:
- The top ring and second ring have the mark to determine the direction to install on them. When installing them to piston, face this mark to the top side.
- Oil ring consists of the upper rail, expander and lower rail. When installing oil ring on piston, be careful of the direction of each rail.

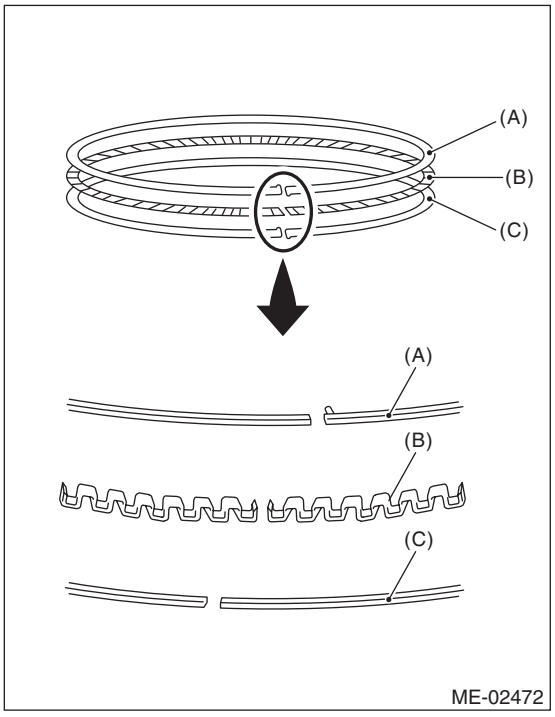

(A) Upper rail
(B) Expander
(C) Lower rail

2) Squarely place the piston ring and oil ring in cylinder using the piston, and measure the piston ring closed gap with a thickness gauge.

Unit: mm (in)

		Standard	Limit
Piston ring closed gap	Top ring	0.20 — 0.25 (0.0079 — 0.0098)	1.0 (0.039)
	Second ring	0.37 — 0.52 (0.015 — 0.020)	1.0 (0.039)
	Oil ring rail	0.20 — 0.50 (0.0079 — 0.0197)	1.5 (0.059)

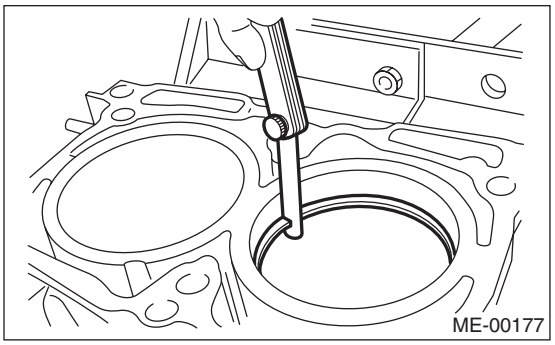

3) Fit the piston ring straight into the piston ring groove, then measure the clearance between piston ring and piston ring groove with a thickness gauge.

NOTE:
Before measuring the clearance, clean the piston ring groove and piston ring.

Unit: mm (in)

		Standard	Limit
Ring groove gap	Top ring	0.040 — 0.080 (0.0016 — 0.0031)	0.15 (0.0059)
	Second ring	0.030 — 0.070 (0.0012 — 0.0028)	0.15 (0.0059)

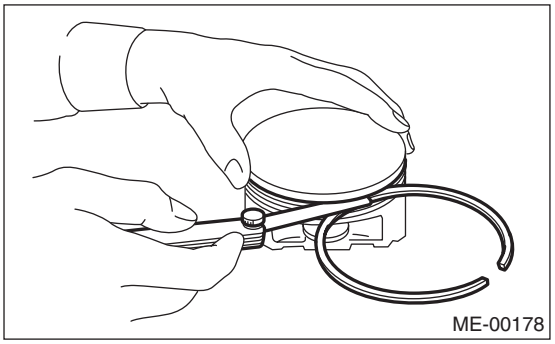

5. CONNECTING ROD

1) Replace the connecting rod, if the large or small end thrust surface is damaged.
2) Check for bend or twist using a connecting rod aligner. Replace the connecting rod if the bend or twist exceeds the limit.

Limit of bend or twist per 100 mm (3.94 in) in length:
0.10 mm (0.0039 in)

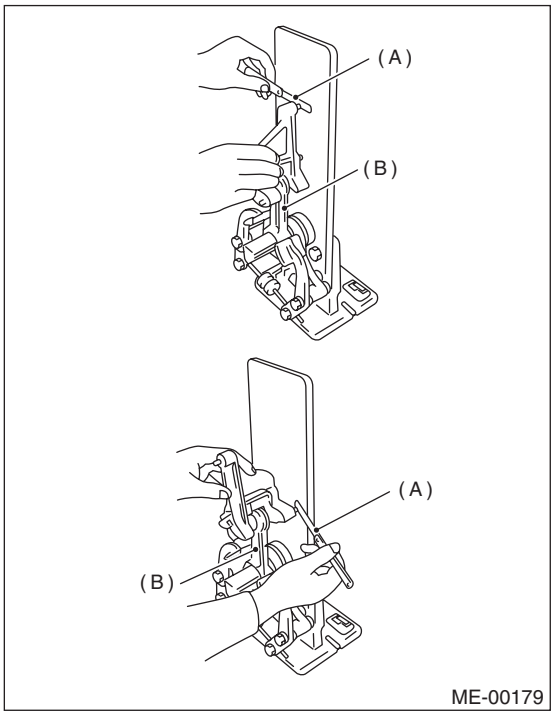

(A) Thickness gauge
(B) Connecting rod

3) Install the connecting rod fitted with bearing to the crankshaft, and measure the thrust clearance using a thickness gauge. Replace the connecting rod if the thrust clearance exceeds the limit.

Connecting rod thrust clearance:
Standard
0.070 — 0.330 mm (0.0028 — 0.0130 in)
Limit
0.4 mm (0.016 in)

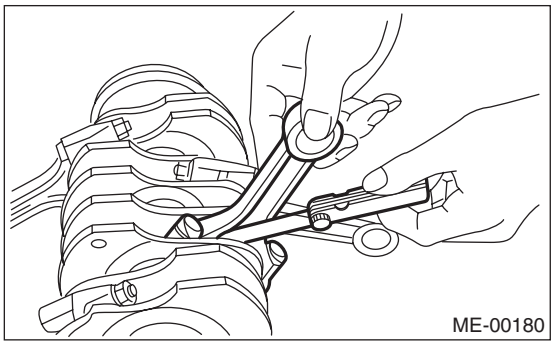

4) Inspect the connecting rod bearing for scar, peeling, seizure, melting, wear, etc.
5) Measure the oil clearance on each connecting rod bearing using plastigauge. If any oil clearance is not within specification, replace the defective bearing with a standard size or undersize part as necessary.

Connecting rod oil clearance:
Standard
0.017 — 0.045 mm (0.0007 — 0.0018 in)
Limit
0.05 mm (0.0020 in)

Unit: mm (in)

Bearing	Bearing size (Thickness at center)	Outer diameter of crank pin
Standard	1.490 — 1.502 (0.0587 — 0.0591)	51.984 — 52.000 (2.0466 — 2.0472)
0.03 (0.0012) undersize	1.504 — 1.512 (0.0592 — 0.0595)	51.954 — 51.970 (2.0454 — 2.0461)
0.05 (0.0020) undersize	1.514 — 1.522 (0.0596 — 0.0599)	51.934 — 51.950 (2.0447 — 2.0453)
0.25 (0.0098) undersize	1.614 — 1.622 (0.0635 — 0.0639)	51.734 — 51.750 (2.0368 — 2.0374)

6) Inspect the bushing at connecting rod small end, and replace if worn or damaged.
7) Measure the piston pin clearance at connecting rod small end. Replace it if the limit has been exceeded.

Clearance between piston pin and bushing:
Standard:
0 — 0.022 mm (0 — 0.0009 in)
Service limit:
0.030 mm (0.0012 in)

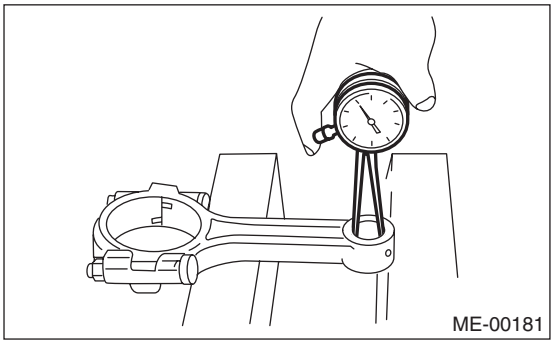

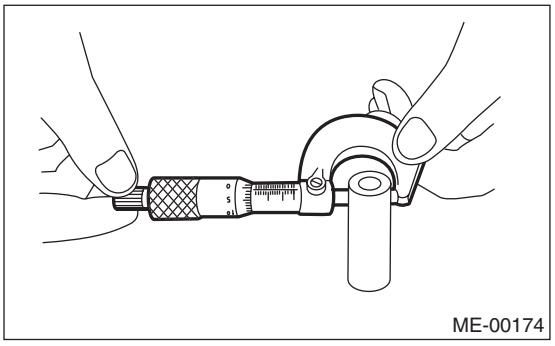

8) The replacement procedure for the connecting rod small end bushing is as follows.

(1) Remove the bushing from connecting rod with ST and press.

(2) Press the bushing with ST after applying oil on the periphery of bushing.

ST 499037100 CONNECTING ROD BUSHING REMOVER AND INSTALLER

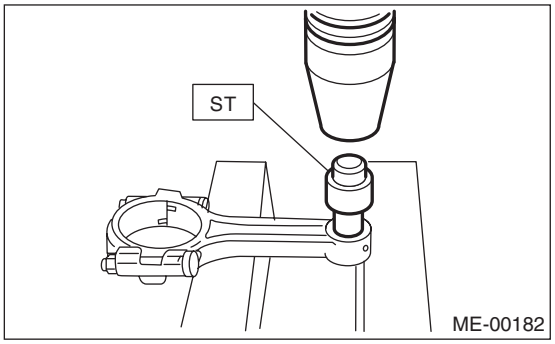

(3) Make two 3 mm (0.12 in) holes in the pressed bushing by aligning with the pre-manufactured holes on the connecting rod, and ream the inside of the bushing.

(4) After completion of reaming, clean the bushing to remove chips.

6. CRANKSHAFT AND CRANKSHAFT BEARING

1) Clean the crankshaft completely, and check it for cracks using liquid penetrant tester. Replace if faulty.

2) Measure the bend of crankshaft. If it exceeds the limit, correct it or replace the part.

NOTE:
If a suitable V-block is not available, using just the #1 and #5 crankshaft bearings on cylinder block, position the crankshaft on cylinder block. Then, measure the crankshaft bend using a dial gauge.

Crankshaft bend limit:
0.035 mm (0.0014 in)

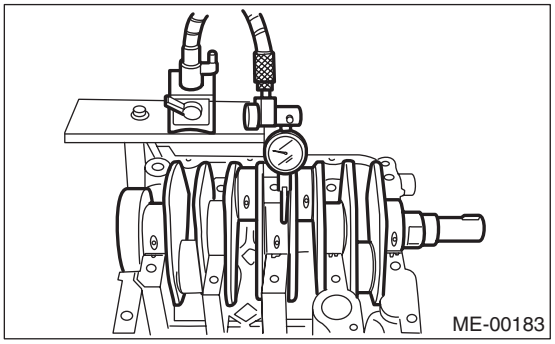

3) Inspect the crank journal and crank pin for wear. If they are not within the specification, replace the bearing with a suitable (undersize) one, and replace or grind to correct the crankshaft as necessary. When grinding the crank journal or crank pin, finish them to the specified dimensions according to the undersize bearing to be used.

Crank pin:
Out-of-roundness
0.003 mm (0.0001 in)
Cylindricality
0.004 mm (0.0002 in)
Grinding limit
To 51.750 mm (2.0374 in) dia.

Crank journal:
Out-of-roundness
0.005 mm (0.0002 in)
Cylindricality
0.006 mm (0.0002 in)
Grinding limit
To 59.758 mm (2.3527 in) dia.

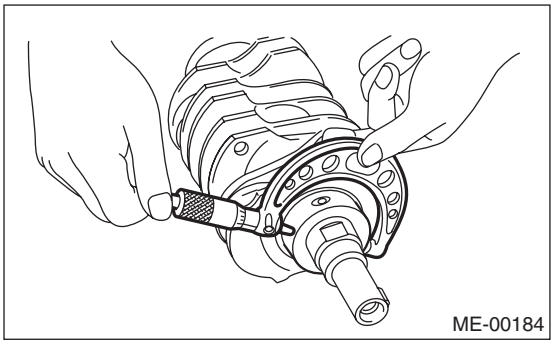

Unit: mm (in)				
		Crank journal diameter		Crank pin diameter
		#1, #3	#2, #4, #5	
Standard	Journal O.D.	59.992 — 60.008 (2.3619 — 2.3625)	59.992 — 60.008 (2.3619 — 2.3625)	51.984 — 52.000 (2.0466 — 2.0472)
	Bearing size (Thickness at center)	1.998 — 2.011 (0.0787 — 0.0792)	2.000 — 2.013 (0.0787 — 0.0793)	1.490 — 1.502 (0.0587 — 0.0591)
0.03 (0.0012) undersize	Journal O.D.	59.962 — 59.978 (2.3607 — 2.3613)	59.962 — 59.978 (2.3607 — 2.3613)	51.954 — 51.970 (2.0454 — 2.0461)
	Bearing size (Thickness at center)	2.017 — 2.020 (0.0794 — 0.0795)	2.019 — 2.022 (0.0795 — 0.0796)	1.504 — 1.512 (0.0592 — 0.0595)
0.05 (0.0020) undersize	Journal O.D.	59.942 — 59.958 (2.3599 — 2.3605)	59.942 — 59.958 (2.3599 — 2.3605)	51.934 — 51.950 (2.0447 — 2.0453)
	Bearing size (Thickness at center)	2.027 — 2.030 (0.0798 — 0.0799)	2.029 — 2.032 (0.0799 — 0.0800)	1.514 — 1.522 (0.0596 — 0.0599)
0.25 (0.0098) undersize	Journal O.D.	59.742 — 59.758 (2.3520 — 2.3527)	59.742 — 59.758 (2.3520 — 2.3527)	51.734 — 51.750 (2.0368 — 2.0374)
	Bearing size (Thickness at center)	2.127 — 2.130 (0.0837 — 0.0839)	2.129 — 2.132 (0.0838 — 0.0839)	1.614 — 1.622 (0.0635 — 0.0639)

4) Use a thickness gauge to measure the thrust clearance of crankshaft at center bearing. If the clearance exceeds the limit, replace the bearing.

Crankshaft thrust clearance:
Standard
0.030 — 0.115 mm (0.0012 — 0.0045 in)
Limit
0.25 mm (0.0098 in)

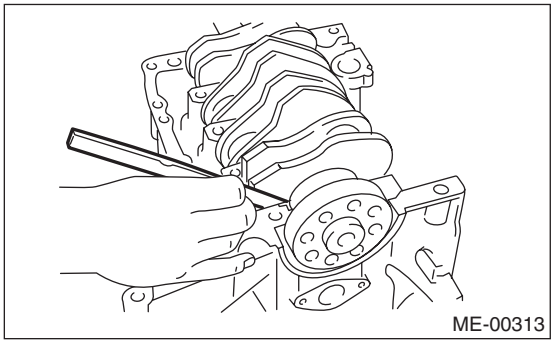

5) Inspect individual crankshaft bearings for signs of flaking, seizure, melting and wear.
6) Measure the oil clearance on each crankshaft bearing using plastigauge. If the measurement is over the limit, replace the faulty bearing with an undersized bearing, and replace or grind to correct the crankshaft as necessary.

Crankshaft oil clearance:
Standard
0.010 — 0.030 mm(0.0004 — 0.0012 in)
Limit
0.040 mm (0.0016 in)